Allied Vision

Alvium
1800 U-1620

Model without hardware options

- IMX542 CMOS sensor
- ALVIUM image processing
- USB3 Vision
- Various hardware options

Alvium 1800 U – Your entry into high-performance imaging

Industrial USB cameras with attractive price-performance ratio

Alvium 1800 U-1620 with Sony IMX542 runs 26.0 frames per second at 16.2 MP resolution.

Alvium 1800 U is your entry into high-performance imaging with ALVIUM® Technology for industrial applications. Equipped with the newest generation of sensors, these small and lightweight cameras deliver high image quality and frame rates at the best price-performance ratio. With its USB3 Vision compliant interface and industrial-grade hardware, it is your workhorse for different machine vision applications whether it is on a PC-based or an embedded system.

Easy software integration with Allied Vision's Vimba Suite and compatibility to the most popular third party image-processing libraries.

See the Alvium Cameras Hardware Options for lens mount and housing options, as well as the Customization and OEM Solutions webpage for additional options.

Allied Vision

Specifications

Interface	USB3 Vision
Resolution	5328 (H) × 3040 (V)
Spectral range	300 to 1100 nm
Sensor	Sony IMX542
Sensor type	CMOS
Shutter mode	Global shutter
Sensor size	Type 1.1
Pixel size	2.74 µm × 2.74 µm
Lens mounts (available)	C-Mount
Max. frame rate at full resolution	26 fps at 450 MByte/s, Mono8
ADC	12 Bit
Image buffer (RAM)	256 KByte
Non-volatile memory (Flash)	1024 KByte

Output	
Bit depth	12-bit Bit
Monochrome pixel formats	Mono8, Mono10, Mono10p, Mono12, Mono12p
YUV color pixel formats	YCbCr411_8_CbYYCrYY, YCbCr422_8_CbYCrY, YCbCr8_CbYCr
RGB color pixel formats	BayerRG8, BayerRG10, BayerRG10p, BayerRG12, BayerRG12p, BGR8, RGB8 (default)

General purpose inputs/outputs (GPIOs)	
TTL I/Os	4 programmable GPIOs

Operating conditions/dimensions	
Operating temperature	-20 °C to +65 °C (housing)
Power requirements (DC)	Power over USB 3.1 Gen 1 | External power 5.0 V
Power consumption	USB power: 4.0 W (typical) | Ext. power: 4.2 W (typical)
Mass	65 g
Body dimensions (L × W × H in mm)	38 × 29 × 29

Quantum efficiency

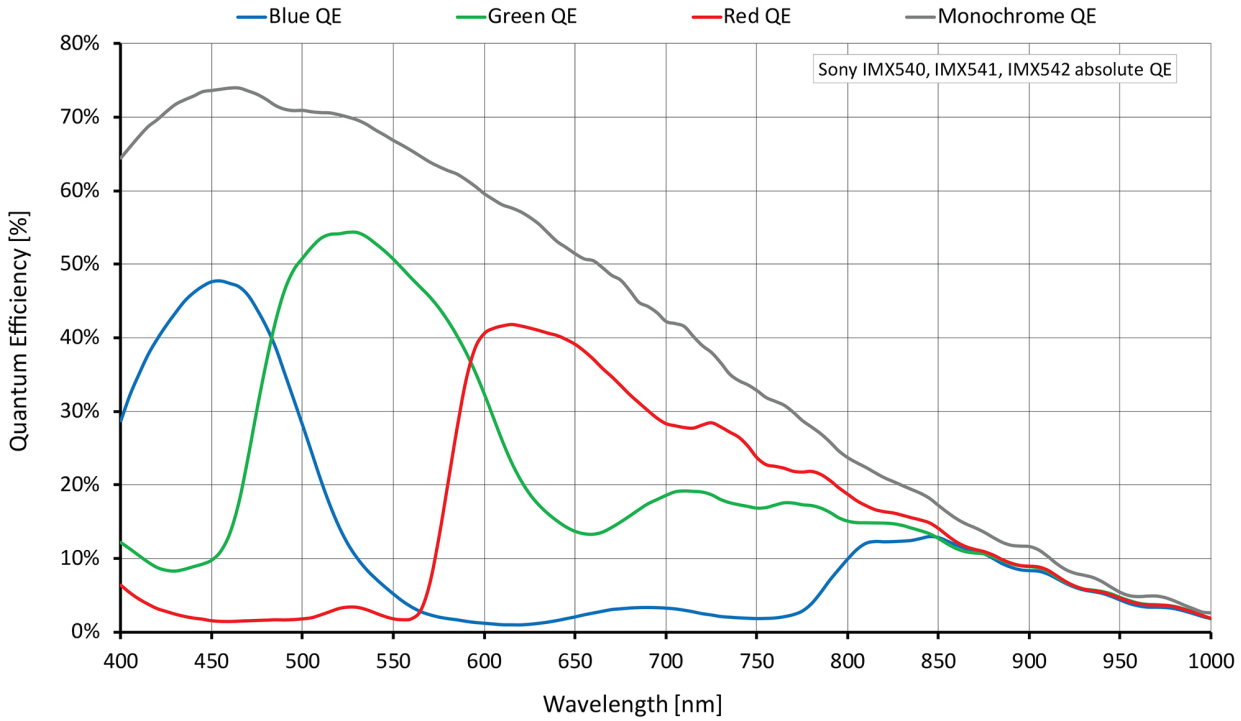

Features

Image control: Auto

- Auto exposure
- Auto gain
- Auto white balance (color models)

Image control: Other

- Adaptive noise correction
- Binning
- Black level
- Color transformation (incl. hue, saturation; color models)
- Contrast
- Custom convolution
- De-Bayering up to 5×5 (color models)
- DPC (defect pixel correction)
- FPNC (fixed pattern noise correction)
- Gamma
- LUT (look-up table)
- Reverse X/Y
- ROI (region of interest)
- Sharpness/Blur

Camera control

- Acquisition frame rate
- Bandwidth control
- Counters and timers
- Firmware update in the field
- I/O and trigger control
- Image chunk data
- Sequencer
- Serial I/Os
- Temperature monitoring
- U3 Power Saving Mode
- User sets
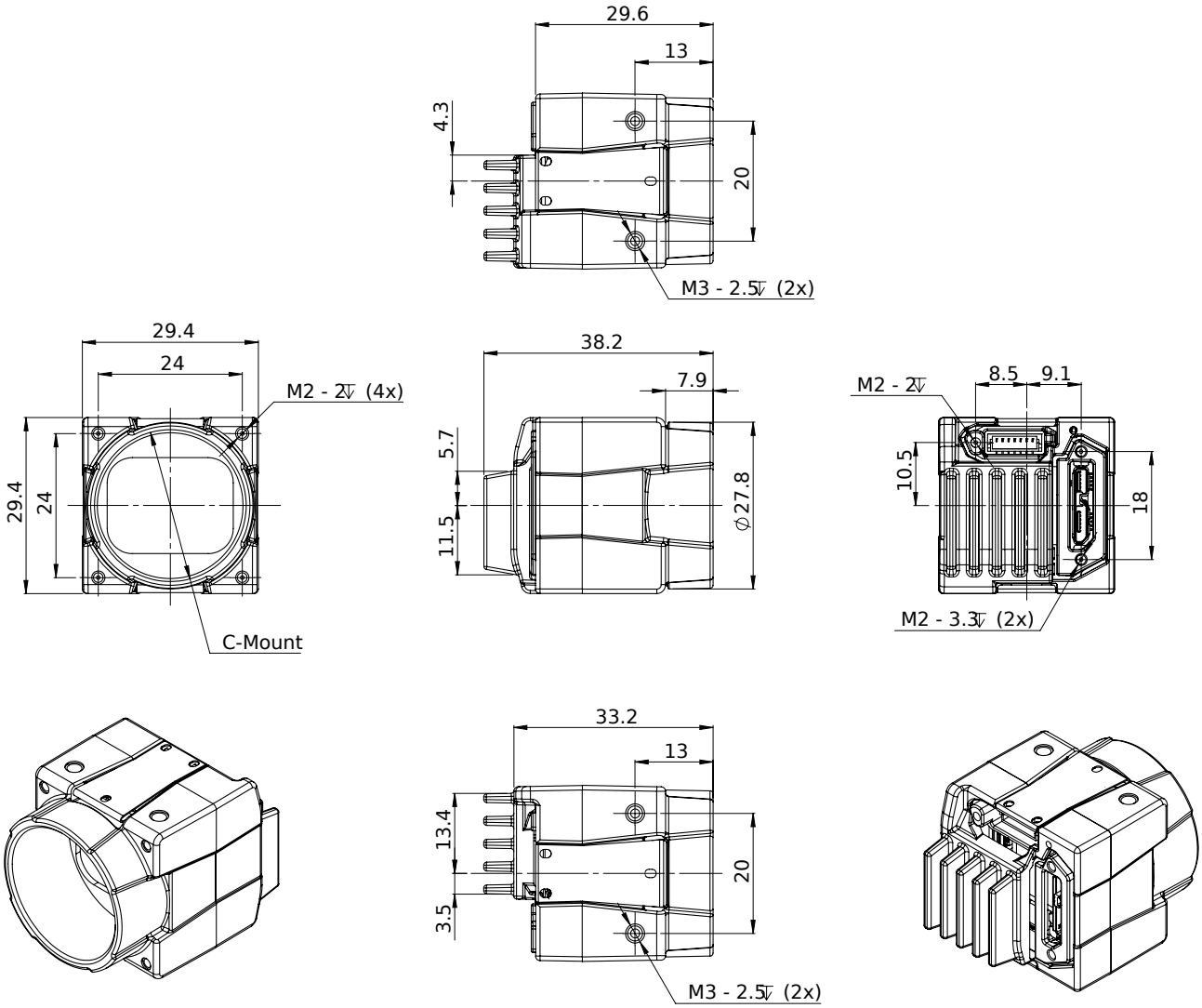
Technical drawing